PRODUCT DATASHEET

Model: LX2T101 LX3T101 LX4T101

Category: LED Track Light
Description: 18w LED Track Light

General Information

Material: Aluminum + Iron
Fitting Colors: Matte White/ Black
Rotation Angle (degree): 355
Tilting Angle (degree): 90
Track System: Available in single wire, 3 wire, 3 phase
IP Rating: 20
Working Temperature (°C): -20 - +32
Storage Temperature (°C): -20 - +50

Product Dimensions and Cut-out Information

Fitting Length (mm): 75
Diameter (mm): 137.2 x 33.6
Height (mm): Not Applicable
Cut-out Dimension (mm): Not Applicable

Dimension:

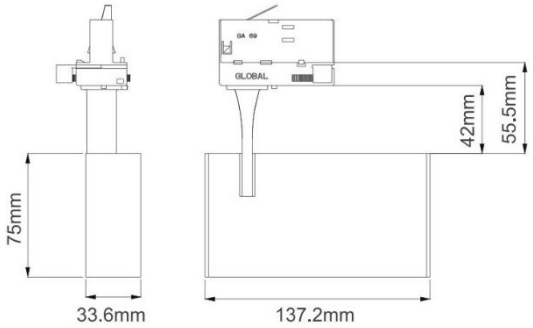

Packing Information

Packaging Type: Individual box
Quantity per carton: 20
CBM per carton: 0.0312
Gross weight per carton (kgs): 16

Lifespan

Lifetime (hours): 50000
Luminous Flux after 50000hours (lm): LM80 Comply

Published on 22.08.2019
©2019 RiO Industrial Limited
All rights reserved

Model: LX2T101 LX3T101 LX4T101

Category: LED Track Light
Description: 18w LED Track Light

Light Technical Information

Color Temperature	CRI (Ra)	Gamut Index (GAI)	System Lumen	Lumen per Watt
2700	90	90	1027	47
2700	95	100	951	43
3000	90	90	1075	49
3000	95	100	999	45
4000	90	90	1143	52
4000	95	100	1056	48
5000	80	90	1344	61

LED Manufacturer: Luminus
LED Type: SMD
LED Model: MP-3030
Optic: Reflector + Lens + Diffuser
Beam Angle (°): 66

Electrical Information

System Power (w): 22
Input Voltage (v) & Frequency: 220-240V 50/60Hz
Output Voltage (v): 34.4 – 37.6
Current (mA): 500
Non-Dimmable: HEP LNTC20W500LRP
Power Factor: 0.9
Efficiency (%): 83
Total Harmonic Distortion (%): <20
Ripple (%): ±5
Dimmable: Triac Dimming – Upon Request
Dali Dimming – Upon Request

Published on 22.08.2019
©2019 RiO Industrial Limited
All rights reserved